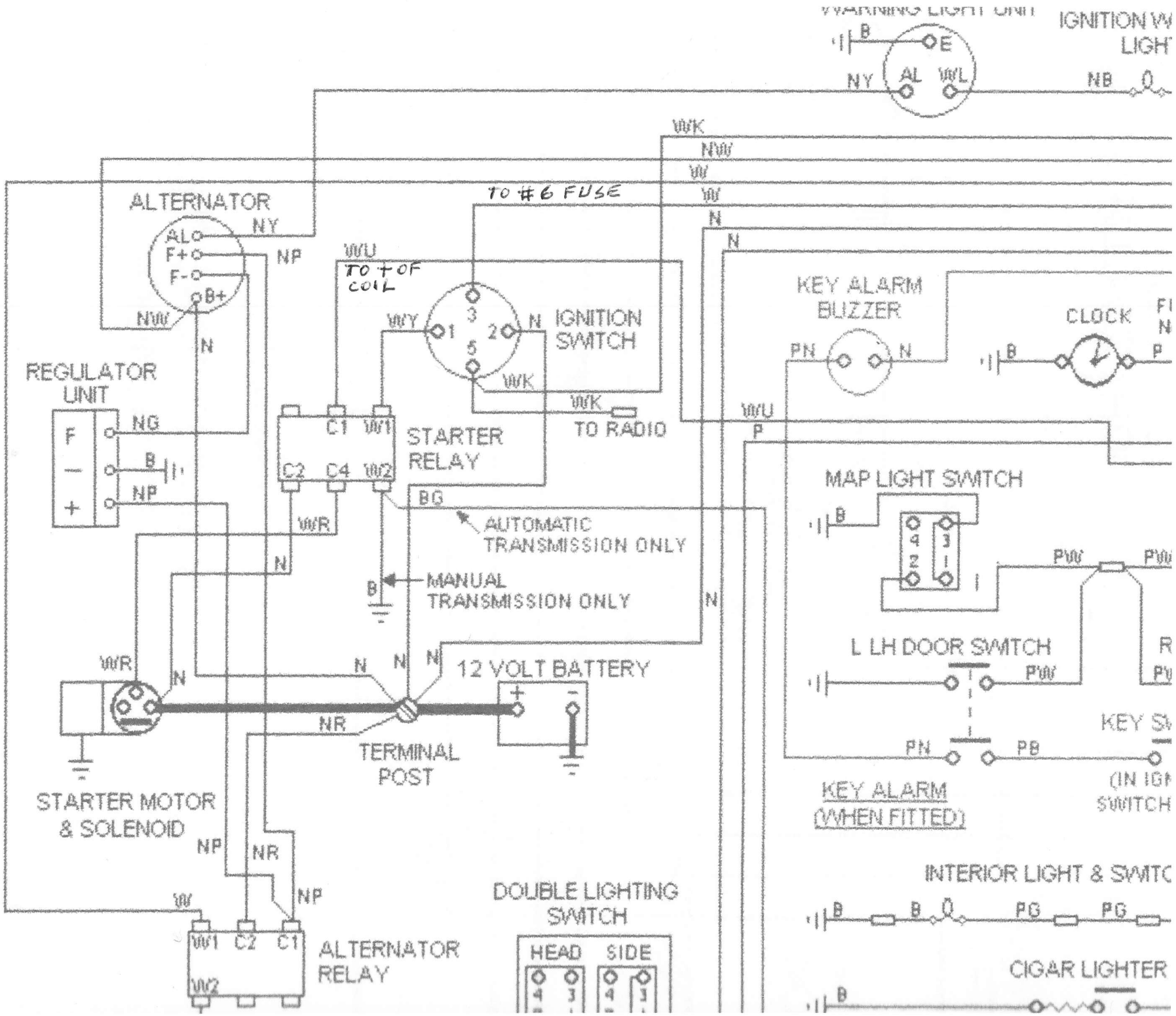
WARNING LIGHT UNIT
IGNITION W
LIGH
B
E
NY
AL
WL
NB
WK
NW
W
W
N
N
TO #6 FUSE
ALTERNATOR
AL
F+
F-
B+
NY
NP
NW
N
WU
TO + OF COIL
WY
1
2
3
5
N
IGNITION SWITCH
WK
WK
TO RADIO
REGULATOR UNIT
F
NG
B
NP
C1
W1
C2
C4
W2
STARTER RELAY
BG
AUTOMATIC TRANSMISSION ONLY
WR
N
B
MANUAL TRANSMISSION ONLY
N
WR
N
N
N
N
12 VOLT BATTERY
NR
TERMINAL POST
STARTER MOTOR & SOLENOID
NP
NR
NP
W
W1
C2
C1
W2
ALTERNATOR RELAY
DOUBLE LIGHTING SWITCH
HEAD
SIDE
KEY ALARM BUZZER
PN
N
WU
P
CLOCK
B
P
MAP LIGHT SWITCH
B
PW
PW
L LH DOOR SWITCH
PW
PN
PB
KEY ALARM (WHEN FITTED)
KEY SW
(IN IGN SWITCH
INTERIOR LIGHT & SWITC
B
B
PG
PG
CIGAR LIGHTER
B